Installation Guide - Modern Rectangular Barn Door Privacy Lock and Flush Pull with Integrated Strike

EMTEK

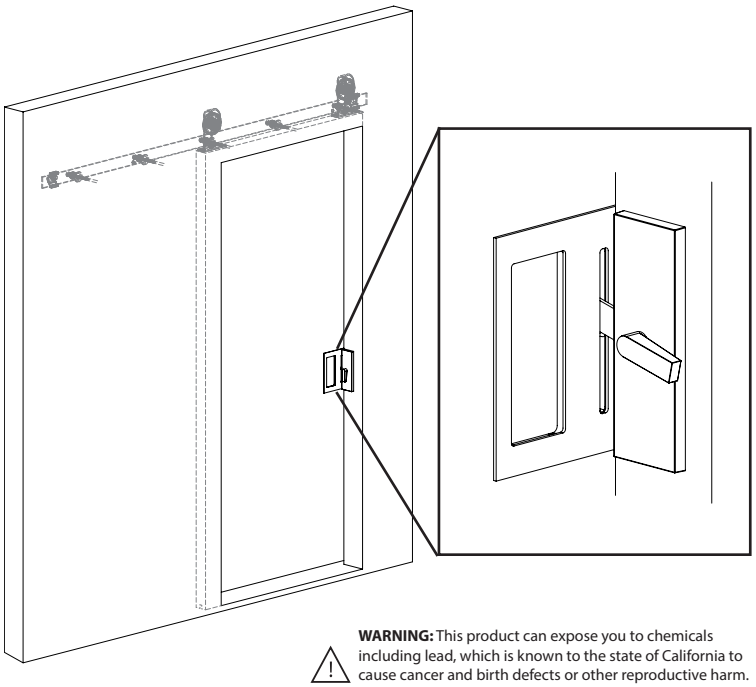

WARNING: This product can expose you to chemicals including lead, which is known to the state of California to cause cancer and birth defects or other reproductive harm. For more information go to **www.P65Warnings.ca.gov.**

1. Door Prep

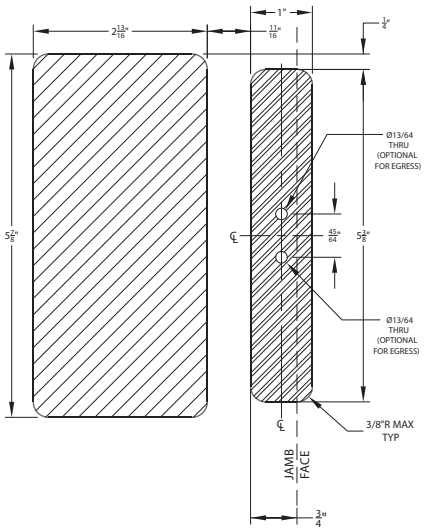

Use door template to prep the door

2. Install Flush Pull

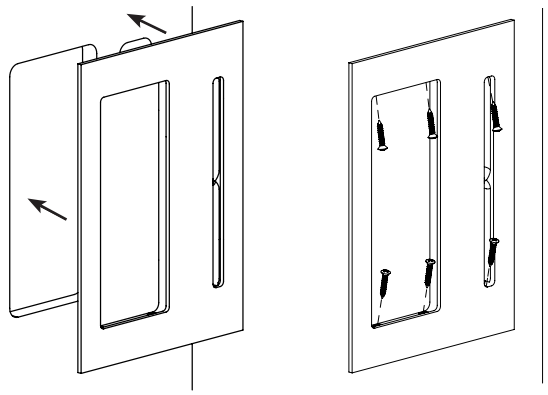

3. Install Mounting Base

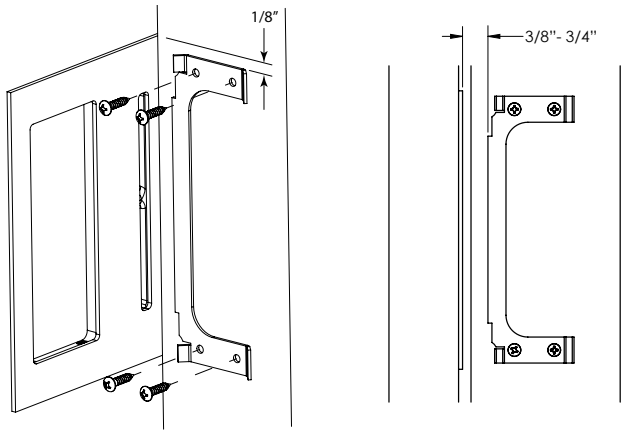

Door Jamb

4. Install Lock Body

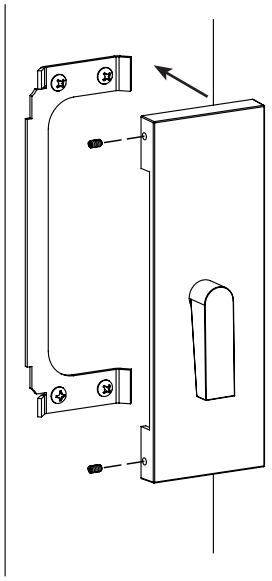
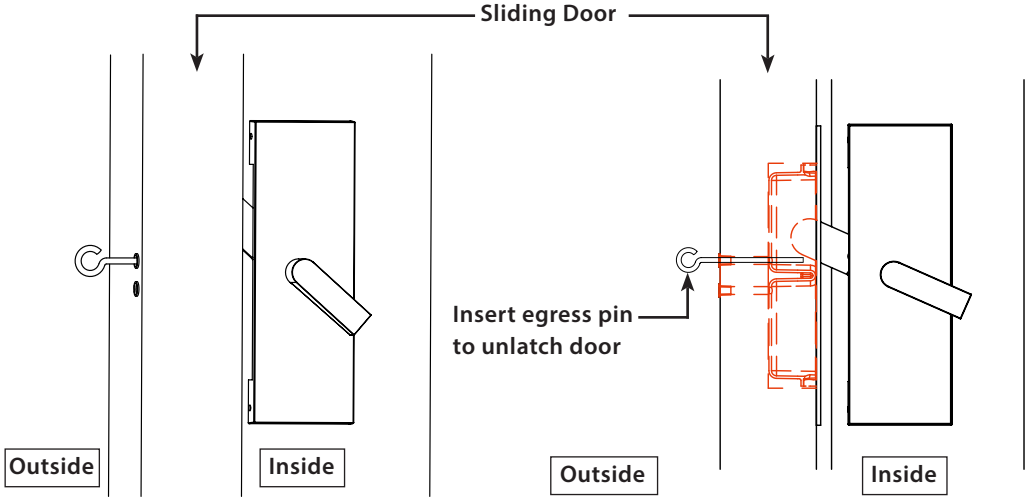
OPTIONAL FOR EGRESS